Use & Care Guide

Side-By-Side Refrigerator

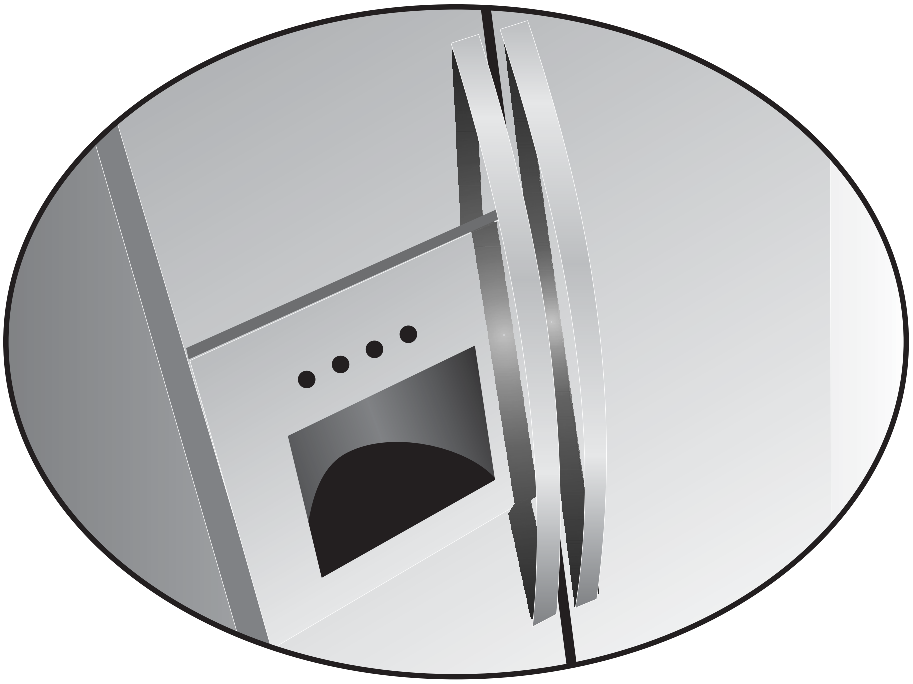

Electrolux

241540100 (1203)

2 Find[redacted]

PLEAS[redacted]

Thank yo[redacted]nces[redacted]
This *Use* [redacted]n and[redacted]
product q[redacted]

We view y[redacted]ure o[redacted]
continue s[redacted]ct info[redacted]

MAKE A RECORD FOR [redacted]EREN[redacted]

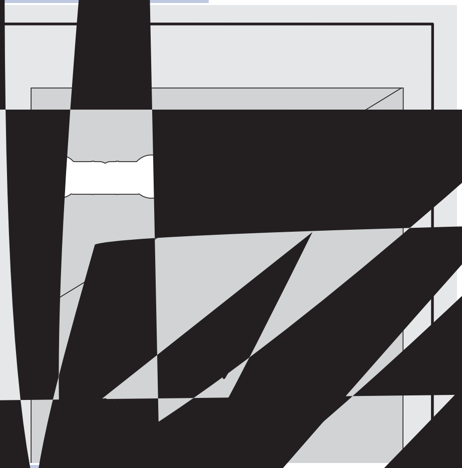

Purchase [redacted]e

Electrol[redacted]

Elec[redacted]

QUES[redacted]

[redacted]inted in the USA

TABLE OF CONTENTS

Finding Information 2
- Please Read And Save This Guide 2
- Make A Record For Quick Reference 2
- Questions? 2
- Table Of Contents 3

Safety 4
- Important Safety Instructions 4
- Electrical Information 5

Removing The Doors 6
- Getting Through Narrow Spaces 6

Connecting The Water Supply 9
- About Your Refrigerator's Water Supply 9

Feature Overview 11
- Understanding Features And Terms 11

Controls & Settings 12
- Allowing Cooling Time Before Use 12
- Setting Cooling Temperatures 12
- System-Monitoring Alarms 14
- Turning The Cooling System On And Off 15

Storage Features.. 16
- Cantilever Shelves 16
- Drawers 17
- Doors 18
- Accessories 19

Automatic Ice & Water Dispenser 20
- Using The Dispenser 20
- Using The Dispenser Control Panel 21
- Priming The Water Supply System 22
- Ice Dispenser Operation & Care 23

Changing The Filter 26
- Locating The Water Filter 26
- Ordering Replacement Filters 26
- Replacing The Water Filter 26

Storing Food & Saving Energy 29
- Ideas For Storing Foods 29
- Ideas For Saving Energy 30

Normal Operating Sounds & Sights 31
- Understanding The Sounds You May Hear 31

Care & Cleaning 32
- Protecting Your Investment 32
- Care & Cleaning Tips 33
- Vacation & Moving Tips 33
- Replacing Light Bulbs 34

Warranty Information....................................... 35

Solutions To Common Problems 36
- Before You Call 36

4 Safety

IMPORTANT SAFETY INSTRUCTIONS

⚠ WARNING

Please read all safety instructions before using your new Electrolux refrigerator.

General Safety

- Do not store or use gasoline, or other flammable liquids, near this or any other appliance. Read product labels for warnings regarding flammability and other hazards.
- Do not operate the refrigerator in the presence of explosive fumes.
- Avoid contact with any moving parts of the automatic ice maker.
- Remove all staples from the carton to avoid cut injuries. Staples can also damage finishes if they come in contact with other appliances or furniture.

Child Safety

Packing Materials:

- Packing cartons covered with rugs, bedspreads, plastic sheets or stretch wrap may become airtight chambers and can quickly cause suffocation.
- Destroy or recycle the product's carton, plastic bags, and any other exterior wrapping material immediately after the refrigerator is unpacked. Children should **never** play with these items.

Child Entrapment And Suffocation:

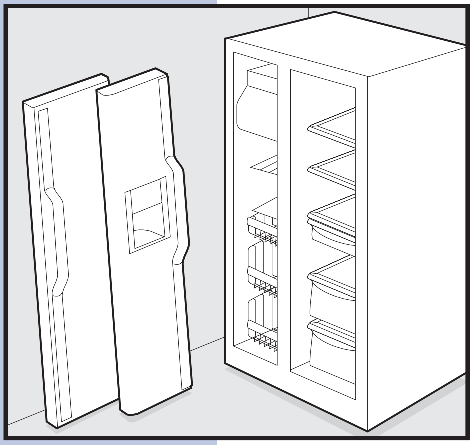

- These problems are not limited to the past. Whether junked, abandoned or temporarily stored (even for a few hours), unattended refrigerators and freezers are dangerous. Please take the precautions listed below.

Proper Disposal Of Refrigerators And Freezers

Before you throw away your old refrigerator/freezer:

- Remove the doors.
- Leave the shelves in place so children may not easily climb inside.
- Have refrigerant removed by a qualified service technician.

ELECTRICAL INFORMATION

⚠ WARNING

You must follow these guidelines to ensure that your refrigerator's safety mechanisms are operating correctly.

- **The refrigerator must be plugged into its own dedicated 115 Volt, 60 Hz., AC-only electric outlet.** The power cord of the appliance is equipped with a three-prong grounding plug for your protection against electrical shock hazards. It must be plugged directly into a properly grounded three-prong receptacle. The receptacle must be installed in accordance with local codes and ordinances. Consult a qualified electrician. **Do not use an extension cord or adapter plug.**
- If the power cord is damaged, it should be replaced by the manufacturer, service technician or a qualified person to prevent any risk.
- Never unplug the refrigerator by pulling on the power cord. Always grip the plug firmly, and pull straight out from the receptacle to prevent damaging the power cord.
- Unplug the refrigerator before cleaning and before replacing a light bulb to avoid electrical shock.
- Performance may be affected if the voltage varies by 10% or more. Operating the refrigerator with insufficient power can damage the compressor. Such damage is not covered under your warranty.
- Do not plug the unit into an outlet controlled by a wall switch or pull cord to prevent the refrigerator from being turned off accidentally.
- Avoid connecting refrigerator to a Ground Fault Interruptor (GFI) circuit.

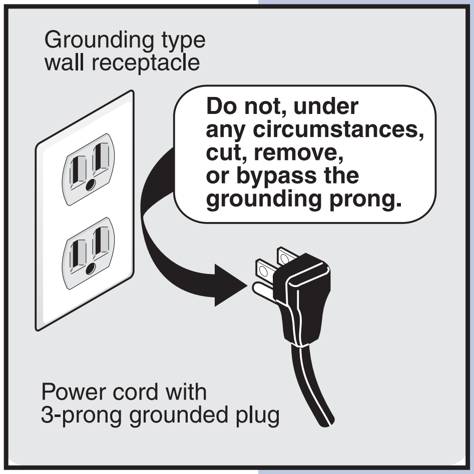

IMPORTANT

To turn off power to your refrigerator, unplug the power cord from the wall outlet.

6 Removing The Doors

GETTING THROUGH NARROW SPACES

If your refrigerator will not fit through an entrance area, you can reduce its size by removing the doors. Check first by measuring the entrance.

Required Tools

You will need the following tools:

To remove the top hinge cover:

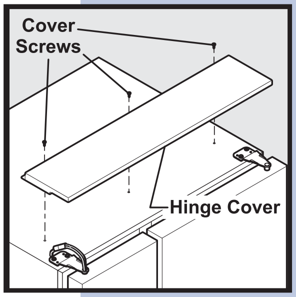

1 Remove the three screws from the cover over the top door hinges.
2 Pull the cover forward about a half-inch and lift it off.

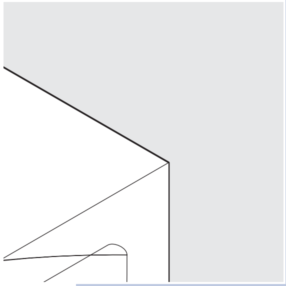

To remove the refrigerator door:

1 Trace lightly around the door's top hinge with a pencil. This makes reinstallation easier.
2 Remove the two screws from the top hinge. Lift the door off of the bottom hinge and and set it aside.
3 Remove the three bottom hinge screws and hinge if necessary.

To reinstall the refrigerator door, reverse the above steps. Once both doors are in place, also replace the top hinge cover.

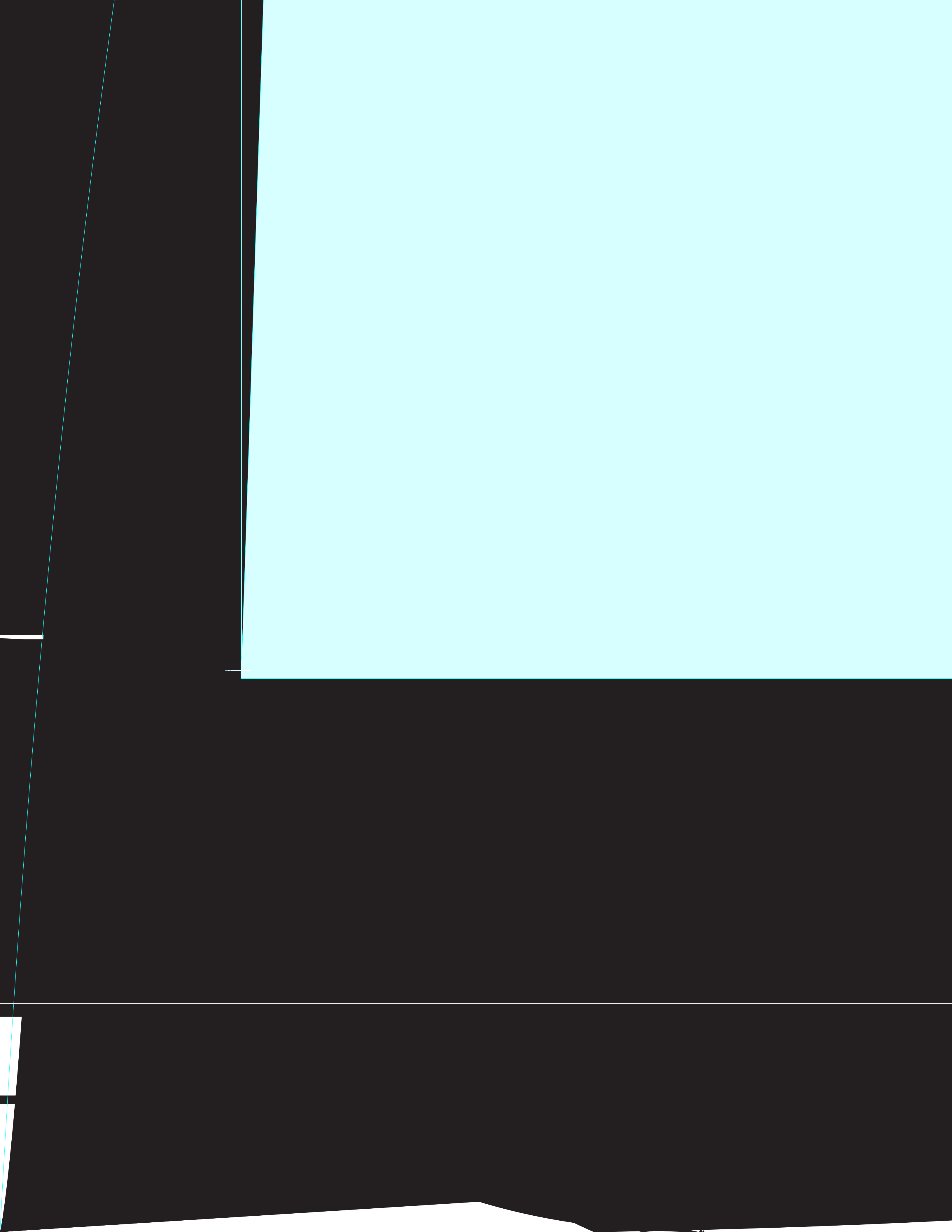

ABOUT YOUR REFRIGERATOR'S WATER SUPPLY

The automatic ice & water dispenser on your refrigerator requires a permanent water supply to function correctly. During installation, you (or a service professional) establish this water supply by connecting a copper tube from your household water system to a valve at the rear of the refrigerator.

You may have already followed the directions in the *Installation Instructions* to connect the water supply. This information is repeated here for future reference if you need to relocate your refrigerator.

⚠ CAUTION

To avoid property damage:

- **Use copper tubing for the water supply line (plastic tubing is more likely to leak). Manufacturer is not responsible for any damage if plastic tubing is used for supply line.**
- **Ensure water supply complies with local plumbing codes.**
- **For proper dispenser operation, recommended water supply pressure should fall between 20 psi and 100 psi. Excessive pressure may cause water filter to malfunction.**

What you will need:

- Access to a cold water line with pressure of 20-100 psi.
- Copper tubing with ¼-inch (6.4mm) OD. Length for this tubing is the distance from the rear of the refrigerator to your household water supply line **plus** 7 feet (2.1 meters).
- A shut-off valve for the connection between your household water line and the refrigerator supply line.

  Do not use a self-piercing shut-off valve.
- A compression nut and ferrule (sleeve) for the water supply connection at the rear of your refrigerator.

NOTE

Electrolux Kit #53039117950, available from your dealer, provides all materials for a water supply installation, including 25 feet of copper tubing and full instructions.

10 Connecting The Water Supply

To connect the water supply to the rear of your refrigerator:

1 Ensure that the refrigerator is not plugged in.

2 Flush the supply line until water is clear by placing the end of the copper tube in a sink or bucket and opening the shut-off valve.

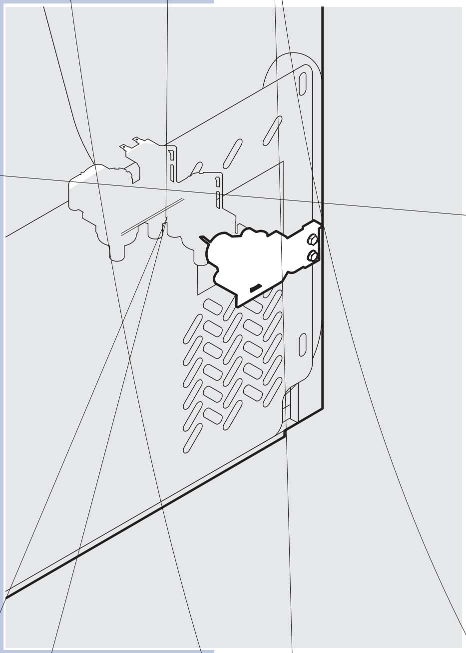

3 Unscrew the plastic cap from the water valve inlet at the rear of your refrigerator. Discard the cap.

4 Slide the brass compression nut, then the ferrule (sleeve) onto copper tube.

5 Push the copper tube into water valve inlet as far as it will go (1/4 inch).

6 Slide the ferrule (sleeve) into valve and finger-tighten the compression nut onto valve. Tighten another half turn with a wrench. **Do not over-tighten**.

7 Secure the copper tube to your refrigerator's rear panel with a steel clamp and screw (see illustration).

8 Coil the excess copper tubing (about 2½ turns) behind your refrigerator as shown. Arrange coiled tubing to avoid vibration or wear against other surfaces.

9 Open water supply shut-off valve and tighten any connections that leak.

The
.

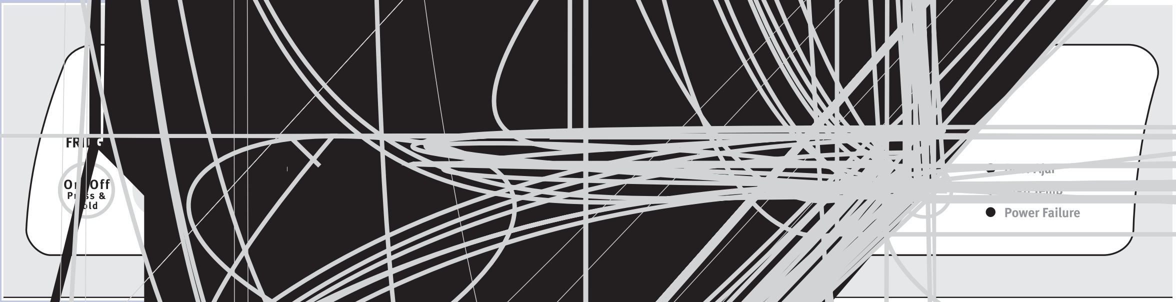

on the left half of the control panel
temperatures of your freezer and fresh
.

higher or lower setting, press the **Up** or **Down**
display. The first time you press the button, the display
u entered. Each press of the button after that increments
ree.

your new setting momentarily, then changes back to the current
efer to page 13 for more about temperature settings.)

Choosing Fahrenheit or Centigrade

Depending on which temperature standard you prefer to use, you can set your control panel to display in fahrenheit or centigrade. To change between fahrenheit and centigrade, press the **Mode** button (located between the two digital temperature displays).

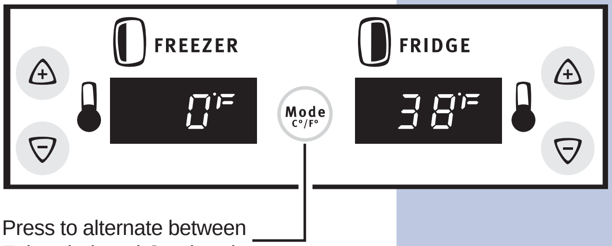

Press to alternate between Fahrenheit and Centigrade

Making Temperature Adjustments

After running your refrigerator for 24 hours, you can adjust temperatures as needed. Make your adjustments small and gradual, allowing time for temperatures to change and stabilize. Refer to the following guidelines for temperature settings.

Temperature Control Range

		Freezer		Fresh Food	
		Fahrenheit	Centigrade	Fahrenheit	Centigrade
↑ *Warmer*	Warmest	6°	-14°	47°	8°
Factory Setting	Midpoint	0°	-18°	37°	3°
Colder ↓	Coldest	-6°	-21°	33°	1°

Temperature Adjustment Guide

If Fresh Food compartment is too warm	Adjust Fresh Food control one degree colder by pressing **Down Arrow** button.
If Fresh Food compartment is too cold	Adjust Fresh Food control one degree warmer by pressing the **Up Arrow** button.
If Freezer compartment is too warm	Adjust Freezer control one degree colder by pressing **Down Arrow** button.
If Freezer compartment is too cold	Adjust Freezer control one degree warmer by pressing the **Up Arrow** button.

What To Do If The Temperature Displays Flash

If ever you you see both temperature displays continuously flashing, it may indicate that the control system has detected a performance problem. Call your Electrolux service representative, who can interpret the flashing message.

SYSTEM-MONITORING ALARMS

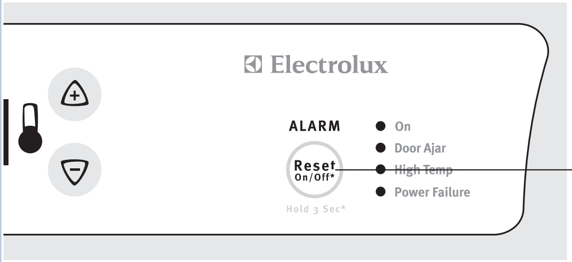

The electronic control system continuously monitors your refrigerator/freezer for temperature consistency, doors left ajar, and power failures. Variances from normal operating conditions are communicated by audible tones and a set of four status indicator lights.

NOTE

Each time you make settings on the control panel, a single audible tone acknowledges your input.

Responding to Alarms (Audible Tones & Indicator Lights)

Your refrigerator's control system can convey the following information through audible tones and the alarm indicator lights.

Alarm Name	Indicator Light	Audible Tones	Condition	How To Respond
On	(light is off)		Alarm system is not active while Freezer and Fresh Food compartments are cooling toward the current temperature settings.	If Freezer and Fresh Food compartments do not match your temperature settings in three hours, expect the control system to signal other conditions. If cooling does not stabilize toward your current settings, call 1-877-435-3267 for assistance.
	Steady Green		Alarm system is active.	No response required.
Door Ajar	Flashing Green	✓	Freezer or Fresh Food door has been open for over five minutes.	Close door to disable and reset alarm.
High Temp	Flashing Amber	✓	Freezer or Fresh Food compartment has been too warm (45° F or higher) for over an hour.	Press **Alarm Reset** button to turn off alarm. If temperatures do not improve, call 1-877-435-3267 for assistance.
Power Failure	Flashing Amber		A power outage was detected.	Press **Alarm Reset** button to turn off alarm and again to reset. Check if the power failure lasted long enough to affect stored food temperatures.

Controls & S[redacted]

Using The Alarm Reset Button

You can disable or activate the alarm system by pressing *and hol*[redacted] **Reset** button for three seconds. Use it, for example, to turn off au[redacted] or flashing indicator lights.

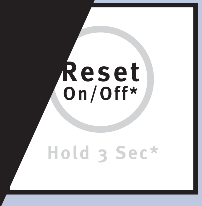

⚠ CAUTION

The alarm system does not automatically reset if you disconnect and rec[redacted] refrigerator's power cord. It can only be reactivated by pressing the Alar[redacted]

Once you disable the alarm system, you must again press *and h*[redacted] **Reset** button for three more seconds to reset (activate) the alarm[redacted]n indicator light remains off while the Freezer and Fresh Food com[redacted] toward the current temperature settings. When temperature setti[redacted]ed, the **On** light displays green to indicate an active alarm system.

TURNIN[redacted]ND

You can disa[redacted] refrigerator by p[redacted] located on the left s[redacted] seconds.

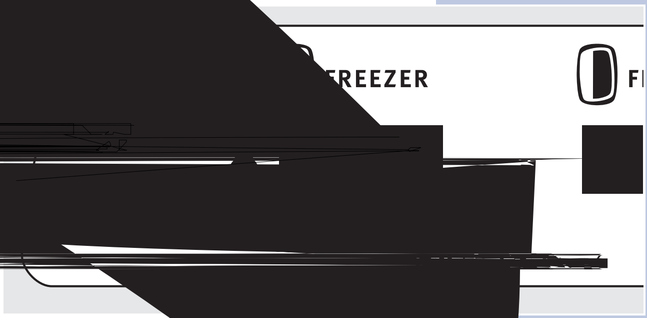

Once you disable the cooling system, all refrigeration to the freezer and fresh food compartments stops.

To turn the cooling system back on, you must again press *and hold* the **On/**[redacted] button for three more seconds.

IMPORTANT

The On/Off button only controls your refrigerator's cooling system. Power to lights and other electrical components continues unless you unplug the power cord.

CANTILEVER SHELVES

⚠ CAUTION

To avoid injury from breakage, handle tempered glass shelves carefully.

You can easily adjust shelf positions in the freezer and fresh food compartments to suit your needs. The shelves have mounting brackets, which attach to slotted supports at the rear of each compartment.

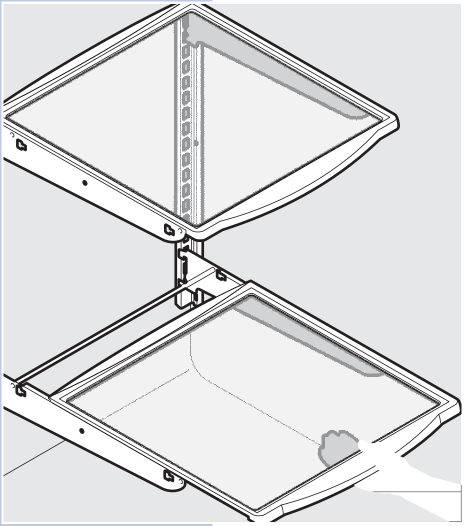

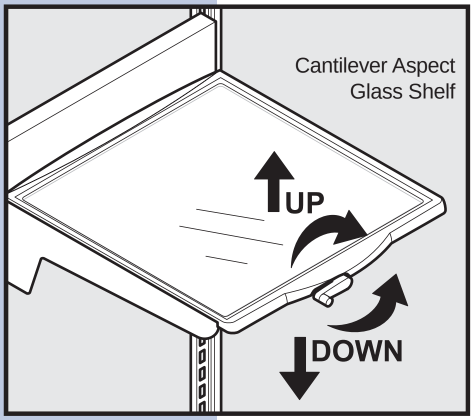

To change the position of a shelf:

1. Before adjusting a shelf, remove all food.
2. Lift the front edge up.
3. Pull the shelf out.
4. Replace by inserting the mounting bracket hooks into the desired support slots.
5. Lower the shelf and lock into position.

Shelf Features

Your refrigerator includes *SpillSafe*™ glass shelves, which are designed to catch and hold accidental spills. These shelves slide out for easy access to food and faster cleaning.

Sliding shelves can be pulled forward as far as their built-in stops allow. Sliding shelves cannot be separated from their mounting brackets.

DRAWERS

Your refrigerator includes a variety of storage drawers. These drawers usually are located in fixed positions at the bottom of the fresh food compartment.

Crispers

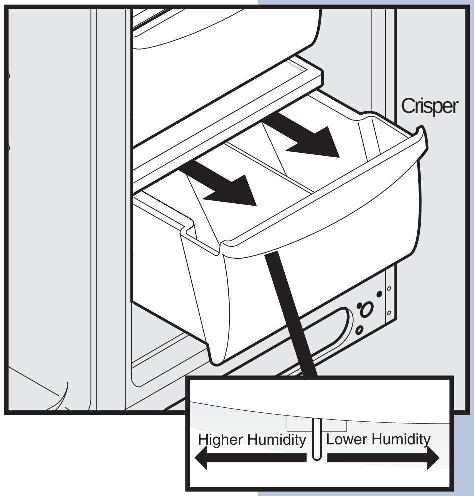

Crisper drawers are designed for storing fruits, vegetables, and other fresh produce. Before storing items in a crisper:

- Wash items in clear water and remove excess water.
- Wrap any items that have strong odors or high moisture content.

Crisper Humidity Control

Crisper drawers include a sliding control for adjusting the humidity inside the crisper. This feature can extend the life of certain fresh vegetables that keep longer in high humidity.

NOTE

Leafy vegetables keep best when stored with the Humidity Control set on Higher Humidity, or in a drawer without a Humidity Control. This keeps incoming air to a minimum and maintains maximum moisture content.

Meat Keeper

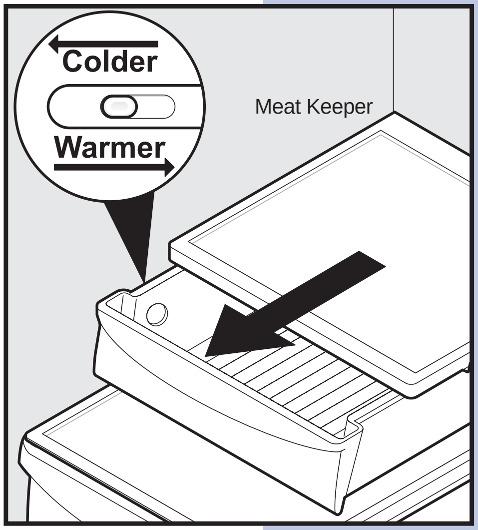

Some models are equipped with a meat keeper drawer for short term storage of bulk meat items. This drawer includes a sliding control for adjusting the temperature inside.

Any meat to be kept longer than two days should be frozen. If you store fruits or vegetables in this drawer, set it to a warmer temperature to prevent freezing.

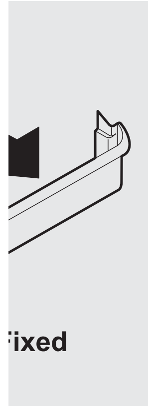
Fixed

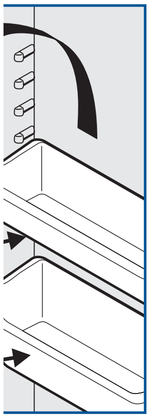

ACCESSORIES

Tall Bottle Retainer

The tall bottle retainer keeps tall containers in the bin from falling forward when opening or closing the refrigerator door. To install, snap the ends of the retainer over the edge of the retainer wall as shown in the illustration.

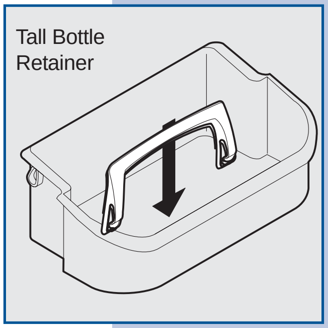

Special Items Rack

The innovative design of the special items rack allows you to store a six-pack of 12 ounce drink cans, a bottle of wine, a two-liter soft drink bottle, or a carton of eggs. To install, slide the special item rack onto the left side of any shelf as shown in the illustration.

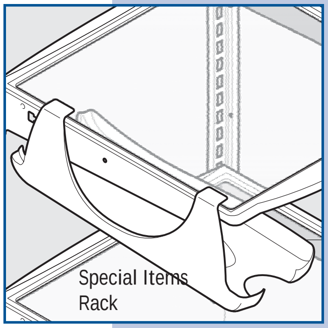

Dairy Compartment

Use the dairy compartment, at the top of the fresh food compartment door, for short term storage of cheese, spreads, or butter. The dairy compartment, which includes a lift-up cover, is designed to be warmer than the open storage area to accommodate these types of food.

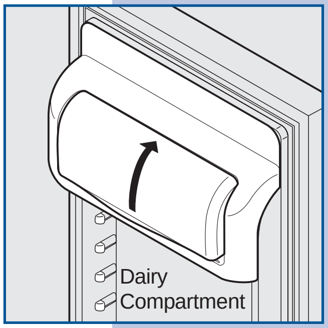

⚠ CAUTION

To avoid errors in your refrigerator's control system, do not remove the magnet that is mounted behind the dairy compartment.

Can Rack

The can rack allows you to efficiently and securely store up to six twelve-ounce cans of beverage drink.

Ice Cream Shelf

The ice cream shelf attaches to the top of the ice dispenser container. It allows storage of both round and rectangular cartons of your favorite ice cream.

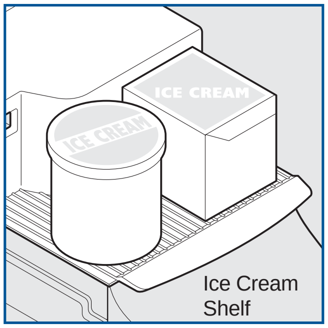

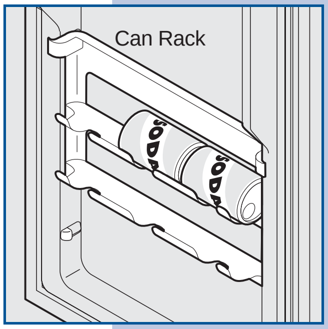

Automatic Ice & Water Dispenser

USING THE DISPENSER

Your automatic ice & water dispenser includes a control panel, a drinking glass bay, and two push-paddles for turning on the ice and water supplies.

Using the dispenser control panel is necessary for the ice dispenser but not the water dispenser. The control panel also includes options for lighting, filter monitoring, and increasing the rates of ice making and freezing.

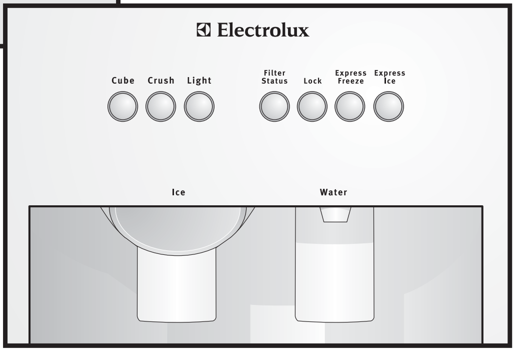

Dispensing Ice

To operate the ice dispenser, press an option for crushed or cubed ice on the control panel. Press a drinking glass against the dispensing paddle (as far up as possible to catch all the ice). To stop, pull the glass away from the dispensing paddle.

See details for operating the dispenser controls on page 21.

Dispensing Water

To operate the water dispenser, press a drinking glass against the dispensing paddle. To stop dispensing water, pull the glass away from the dispensing paddle.

The dispensed water is not cold. For colder water, first add crushed ice or cubes to your drinking glass.

Drip Tray

A drip tray located at the base of the dispenser bay catches small spills and allows them to evaporate. This drip tray is removable for easy cleaning.

NOTE

Please do not pour excess water and ice into the drip tray. It does not have a drain.

USING THE DISPENSER CONTROL PANEL

Cube Button & Indicator Light	Press button to get cubed ice. Light displays blue. Press glass against ice dispensing paddle, holding high up to catch all ice.
Crush Button & Indicator Light	Press button to get crushed ice. Light displays blue. Press glass against ice dispensing paddle, holding high up to catch all ice.
Light Button & Indicator Light	Press button to turn on dispenser light. Light displays blue. Press button again to turn off dispenser light. Dispenser light also turns on automatically when ice and/or water is dispensed.
Filter Status Button & Indicator Light	Light displays in one of three possible colors each time the dispenser is used to show status of water filter: **Green** Water filter does not need changing. **Amber** Water filter is about 80 percent used. Please order a new one. **Red** Water filter is 100 percent used. Please change as soon as possible. After replacing the water filter, reset the filter status by pressing and holding **Filter Status** button for 10-15 seconds.
Lock Button & Indicator Light	The dispenser can be locked to prevent unwanted use. To lock, press and hold button for 3-5 seconds. Light displays blue. To unlock, press and hold button for 3-5 seconds until light goes out.
Express Freeze Button & Indicator Light	Press and hold button for 3-5 seconds to activate faster rate for freezing food (preserving freshness). Light displays blue. Press and hold button for 3-5 seconds again to deactivate.
Express Ice Button & Indicator Light	Press and hold button for 3-5 seconds to increase ice production for special occasions, such as parties. Light displays blue. Press and hold button for 3-5 seconds again to deactivate.

Automatic Ice & Water Dispenser

PRIMING THE WATER SUPPLY SYSTEM

Your refrigerator's water supply system includes several tubing lines, an advanced water filter, a distribution valve bank, and a reserve tank to ensure ample supply to the ice and water dispenser at all times. This system needs to be completely filled with water when first connected to an external supply line.

⚠ CAUTION

For proper dispenser operation, recommended water supply pressure should fall between 20 psi and 100 psi. Excessive pressure may cause water filter to malfunction.

To prime the water supply system:

1. Begin filling the tank by pressing and holding a drinking glass against the water dispenser paddle.
2. Keep the glass in this position until water comes out of the dispenser. **It may take about 1½ minutes**.
3. Continue dispensing water for about 3 minutes to flush the system and plumbing connections of any impurities (stopping to empty the glass as necessary).

NOTE

The water dispenser has a built-in device that shuts off the water flow after 3 minutes of continuous use. To reset this shutoff device, simply release the dispenser paddle.

⚠ CAUTION

Pushing the dispensing paddle in for more than 4 minutes may cause the dispenser motor to overload and stop. The overload protector resets automatically after 3-4 minutes.

ICE DISPENSER OPERATION & CARE

The ice maker, ice bin, and dispenser feeding mechanism are located in the top of the freezer compartment. After the refrigerator is installed properly and has cooled for several hours, the ice maker can produce ice within 24 hours. It can completely fill an ice bin in about two days.

IMPORTANT

The ice maker is turned on at the factory so it can work as soon as you install your refrigerator. If you cannot connect a water supply, turn the ice maker's On/Off switch to Off. Otherwise, the ice maker's fill valve may be noisy when it attempts to operate without water.

Using The Ice Dispenser After Installation

Before making ice for the first time, be sure to prime the water supply system as described on page 22. Air in new plumbing lines can result in two or three empty ice maker cycles. Furthermore, if the system is not flushed, the first ice cubes may be discolored or have an odd flavor.

Turning The Ice Dispenser On And Off

Ice production is controlled by the ice maker's **On/Off** power switch. Press the switch to the "**O**" position to turn it Off and press to the "**I**" position to turn it On.

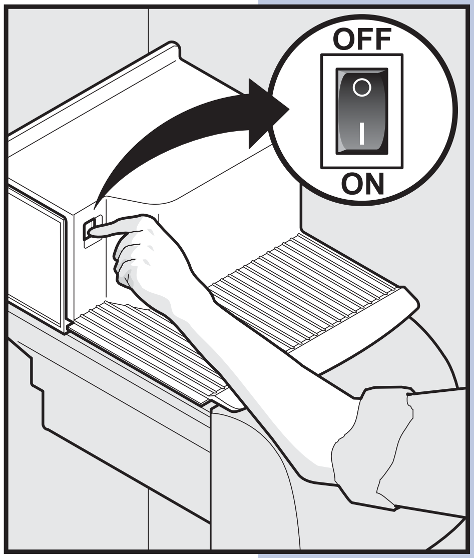

NOTE

The ice maker also has a built-in wire signal arm, which automatically stops ice production when the ice bin is full. This signal arm should not be used to manually stop the ice maker.

Automatic Ice & Water Dispenser

Ice Dispenser Tips

- Ice cubes stored too long may develop an odd flavor. Empty the ice container as explained on the next page.
- Occasionally shake the ice container to keep ice separated.
- If your refrigerator is not connected to a water supply or the water supply is turned off, turn off the ice maker by pressing the **On/Off** switch.
- If you need a large quantity of ice at one time, it is best to get cubes directly from the ice container.
- The following sounds are normal when the ice maker is operating:
  - Motor running
  - Ice dropping into ice container
  - Water valve opening or closing
  - Ice loosening from tray
  - Running water
- Turn off the ice maker when cleaning the freezer and during vacations.
- If you turn off the ice maker for a long period of time, you should also turn off the water supply valve.

⚠ CAUTION

Chemicals from a malfunctioning water softener can damage the ice maker. If the water supply to your refrigerator is softened, be sure the softener is maintained to work properly.

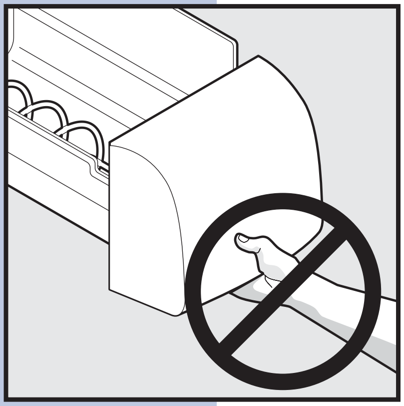

Cleaning The Ice Dispenser

Clean the ice maker and ice bin at regular intervals, particularly before you take a vacation or move.

⚠ CAUTION

When removing the ice bin, do not grip the ice chute (beneath the front of the bin) as a handle. Surfaces in the ice chute may be sharp.

To clean the ice dispenser:

1 Turn off ice production by pressing the ice maker's **Off/On** switch.

2 Remove the ice bin by lifting up and out.

3 Empty and carefully clean the ice bin with *mild* detergent. Rinse with clear water. Do not use harsh or abrasive cleaners.

4 Allow the ice bin to dry completely before replacing in the freezer.

5 Remove ice chips and clean the ice bin shelf and the freezer door chute (for more tips on care and cleaning, see page 33).

6 Replace the ice bin. Press the ice maker's **Off/On** switch to resume ice production.

Remove and empty the ice storage bin if:

- An extended power failure (one hour or longer) causes ice cubes in the ice storage bin to melt and freeze together, jamming the dispenser mechanism.
- You do not use the ice dispenser frequently. Ice cubes will freeze together in the bin, jamming the dispenser mechanism.

Remove the ice storage bin and shake to loosen the cubes or clean as explained above.

Never use an ice pick or similar sharp instrument to break up the ice. This could damage the ice storage bin and dispenser mechanism.

IMPORTANT

When removing the ice bin, avoid rotating the auger inside the bin. The auger must align with its drive mechanism when the bin is replaced. If you accidentally move the auger, realign by making quarter turns until the ice bin fits back in place.

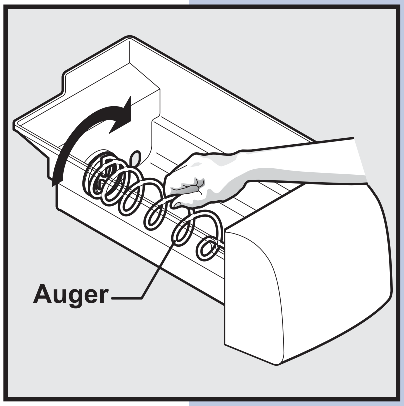

Changing The Filter

LOCATING THE WATER FILTER

Your refrigerator is equipped with a water filtering system. The water filter, which uses Electrolux ***pure** advantage*™ technology, filters all dispensed drinking water as well as the water used to produce ice.

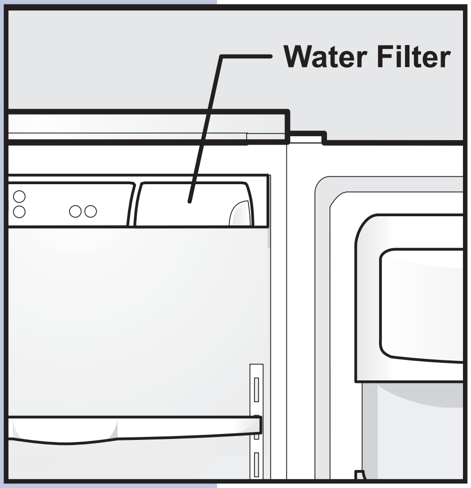

Water Filter Location

The water filter is located at the top of the fresh food compartment, next to the electronic control system panel. For more information about when to replace the filter, see “Using The Dispenser Control Panel” on page 21.

ORDERING REPLACEMENT FILTERS

Order new filters through the dealer where you bought your refrigerator, or contact the *Electrolux Customer Care Center* at **1-877-435-3287**, or go to our web site at **www.electroluxusa.com**. You may want to consider ordering extra filters when you first install your refrigerator. Here is the product number to request when ordering:

Water Filter ***pure** advantage*™ replacement cartridge

REPLACING THE WATER FILTER

In general, you should change the water filter every six to nine months to ensure highest possible water quality. The **Filter Status** light on the dispenser control panel (see page 20) prompts you to replace the filter after 400 gallons of water has flowed through the system.

If your refrigerator has not been used for a period of time (during moving for example), change the filter before reinstalling the refrigerator.

NOTE

The ice and water system can also operate without filtration if you use a bypass in place of the water filter cartridge. Please contact the *Electrolux Customer Care Center* at 1-877-435-3287 or visit our web site at www.electroluxusa.com to order the bypass component (Part No. 240396701).

More About Your Advanced Water Filter

The ***pure** advantage*™ Ice & Water Filter System is tested and certified by NSF International, the nationally respected, not-for-profit certification organization for public health safety. The ***pure** advantage*™ filter system is tested and certified to ANSI/NSF Standards 42 and 53. See the performance data sheet that came with your product for detailed specifications.

This system should not be used on water that is microbiologically unsafe or with water of unknown quality unless the water has been adequately disinfected before or after traveling through the filtration system.

NSF Test & Certification Results:

- Rated Capacity - 400 gallons
- Rated service flow - .5 gallons per minute
- Maximum Rated Pressure - 100 pounds per square inch
- Maximum Operating Temp. - 100° F

Changing The Filter

To replace your *pure advantage*™ water filter:

It is not necessary to turn the water supply off to change the filter. Be ready to wipe up any small amounts of water released during the filter replacement. The bottom of the filter housing includes two small water drainage holes, so be sure to remove any stored food from the top shelf.

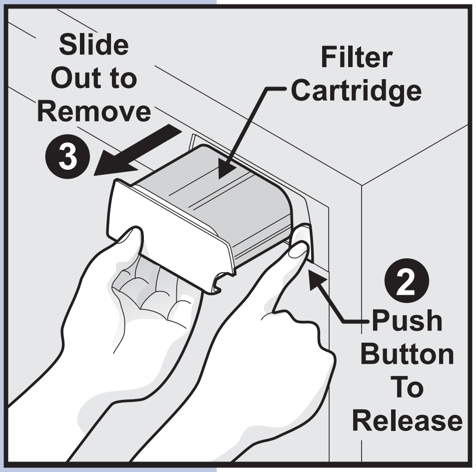

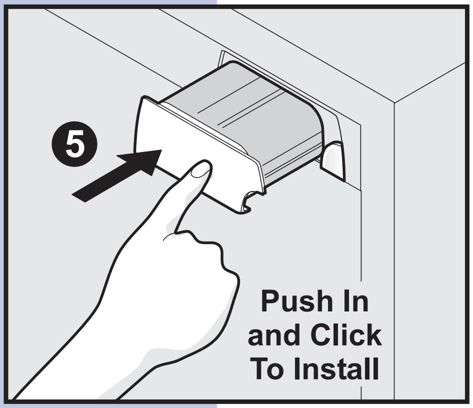

NOTE

The o-rings on a new water filter are lubricated. To ensure a good seal, please do not remove this lubricant.

1 Turn **Off** the ice maker power switch (see page 23 for more about turning off the ice maker).

2 Push the filter release button to the right of the cartridge to disconnect it.

3 Slide the old filter cartridge straight out of the housing and discard it.

4 Unpackage the new filter cartridge and slide it gently into the filter housing until it stops against the snap-in connector at the back of the housing.

5 **Push firmly until the cartridge snaps into place**. When fully engaged, the front of the filter cartridge should be flush with the filter release button.

6 Turn **On** the ice maker power switch (see page 23 for more about turning on the ice maker).

7 Press a drinking glass against the water dispenser while checking for any leaks at the filter housing. Any spurts and sputters that occur as the system purges air out of the dispenser system are normal.

8 After filling one glass of water, continue flushing the system for about three minutes.

9 Press and hold the **Filter Status** button on the Ice & Water Dispenser control panel for 3 seconds. The light flashes red, amber, and green to indicate the **Filter Status** has been reset.

IDEAS FOR STORING FOODS

Fresh Food Storage

- Keep the fresh food compartment between 34° F and 40° F with an optimum temperature of 37° F (see page 13 for more about temperature settings).
- Avoid overcrowding the refrigerator shelves, which reduces air circulation and causes uneven cooling.

Fruits and Vegetables

- Store fruits and vegetables in crisper drawers, where trapped moisture helps preserve food quality for longer time periods.

Meat

- Wrap raw meat and poultry securely so leakage and contamination of other foods or surfaces does not occur.
- Use the meat keeper drawer for short term storage. Any meat to be kept longer than two days should be frozen.
- See page 17 for more about the meat keeper drawer.

Frozen Food Storage

- Keep the freezer compartment at 0° F or lower (see page 13 for more about temperature settings).
- A freezer operates most efficiently when it is at least 2/3 full.

Packaging Foods for Freezing

- To minimize food dehydration and quality deterioration, use aluminum foil, freezer wrap, freezer bags or airtight containers. Force as much air out of the packages as possible and seal them tightly. Trapped air can cause food to dry out, change color, and develop an off-flavor (freezer burn).
- Wrap fresh meats and poultry with suitable freezer wrap prior to freezing.
- Do not refreeze meat that has completely thawed.

Loading the Freezer

- Avoid adding too much warm food to the freezer at one time. This overloads the freezer, slows the rate of freezing, and can raise the temperature of frozen foods.
- Leave a space between packages, so cold air can circulate freely, allowing food to freeze as quickly as possible.
- Avoid storing hard-to-freeze foods, such as ice cream and orange juice, on the freezer door shelves. These foods are best stored in the freezer interior where the temperature varies less.

IDEAS FOR SAVING ENERGY

Installation

- Locate the refrigerator in the coolest part of the room, out of direct sunlight, and away from heating ducts or registers. Do not place the refrigerator next to heat-producing appliances such as a range, oven, or dishwasher. If this is not possible, a section of cabinetry or an added layer of insulation between the two appliances will help the refrigerator operate more efficiently.
- Level the refrigerator so that the doors close tightly.

Temperature Settings

- Refer to earlier sections in this *Use & Care Manual* (beginning on page 12) for recommendations on temperature control settings.

Food Storage

- Avoid overcrowding the refrigerator or blocking cold air vents. Doing so causes the refrigerator to run longer and use more energy.
- Cover foods and wipe containers dry before placing them in the refrigerator. This cuts down on moisture build-up inside the unit.
- Organize the refrigerator to reduce door openings. Remove as many items as needed at one time and close the door as soon as possible.

Normal Operating Sounds & Sights

UNDERSTANDING THE SOUNDS YOU MAY HEAR

Your new high-efficiency refrigerator may introduce unfamiliar sounds. These sounds normally indicate your refrigerator is operating correctly. Some surfaces on floors, walls, and kitchen cabinets may make these sounds more noticeable.

NOTE

Energy efficient foam in your refrigerator is not a sound insulator.

Following is a list of major components in your refrigerator and the sounds they can cause:

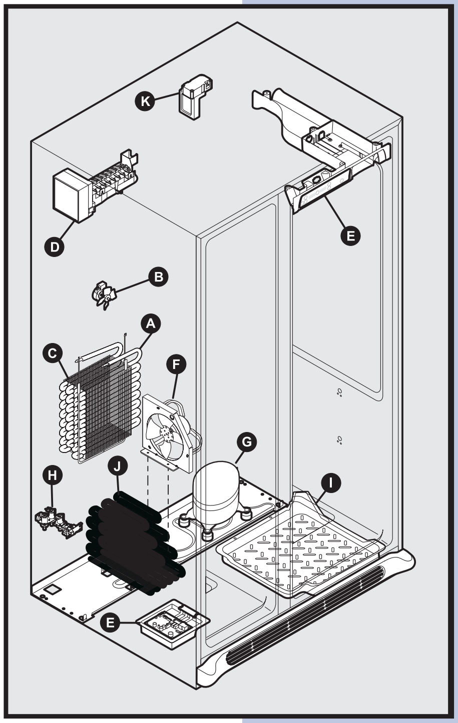

A **Evaporator** Refrigerant through the evaporator may create a boiling or gurgling sound.

B **Evaporator Fan** You may hear air being forced through the refrigerator by the evaporator fan.

C **Defrost Heater** During defrost cycles, water dripping onto the defrost heater may cause a hissing or sizzling sound. After defrosting, a popping sound may occur.

IMPORTANT

During automatic defrost cycle, a red glow in the back wall vents of your freezer compartment is normal.

D **Automatic Ice Maker** When ice has been produced, you will hear ice cubes falling into the ice bin.

E **Cold Control & Automatic Defrost Control** These parts can produce a snapping or clicking sound when turning the cooling system on and off.

F **Condenser Fan** You may hear air being forced through the condenser.

G **Compressor** Modern, high-efficiency compressors run much faster than in the past. The compressor may have a high-pitched hum or pulsating sound.

H **Water Valve** Makes a buzzing sound each time it opens to fill the ice maker.

I **Drain Pan** (not removable) You may hear water dripping into the drain pan during the defrost cycle.

J **Condenser** May create minimal sounds from forced air.

K **Motorized Damper** May produce a light humming during operation.

PROTECTING YOUR INVESTMENT

Keeping your refrigerator clean maintains appearance and prevents odor build-up. Wipe up any spills immediately and clean the freezer and fresh food compartments at least twice a year. When cleaning, take the following precautions:

- Never use metallic scouring pads, brushes, abrasive cleaners or strong alkaline solutions on any surface.
- Do not wash any removable parts in a dishwasher.
- Always unplug the electrical power cord from the wall outlet before cleaning.

NOTE

If you set your temperature controls to turn off cooling, power to lights and other electrical components continues until you unplug the power cord from the wall outlet.

- Remove adhesive labels by hand. Do not use razor blades or other sharp instruments which can scratch the appliance surface.
- Do not remove the serial plate.

Refer to the guide on the next page for details on caring and cleaning specific areas of your refrigerator.

⚠ CAUTION

- Pull the refrigerator straight out to move it. Shifting it from side to side may damage flooring. Be careful not to move the refrigerator beyond the plumbing connections.
- Damp objects stick to cold metal surfaces. Do not touch refrigerated surfaces with wet or damp hands.

IMPORTANT

If you store or move your refrigerator in freezing temperatures, be sure to completely drain the water supply system. Failure to do so could result in water leaks when the refrigerator is put back into service. Contact a service representative to perform this operation.

CARE & CLEANING TIPS

Part	Cleaning Agents	Tips and Precautions
Interior & Door Liners	• Soap and water • Baking soda and water	• Use 2 tablespoons of baking soda in 1 quart of warm water. • Be sure to wring excess water out of sponge or cloth before cleaning around controls, light bulb or any electrical part.
Door Gaskets	• Soap and water	• Wipe gaskets with a clean soft cloth.

•£@""é £@ ê" Ð -"Q â' 41 CJ Cô8,".4£M4©ãB &Â ÓI-E à ê-Ø rÒÝ€ 0 s1"J4Â# $ 8IUT94 R‡– 40Ä),ÄG@ #UB5T...9 "7UA 7UN),ÅU #UB5Tá CuT G• CuTN 7UA),Å#UGBB˜L d ,5T#UDy 7U@ HCuT „),ÅU #UB5Q HCuT 5CuT „7U@ HB˜Li#Ph),Á#UH#UB5Q 7UA#PhCuT#UHYž4 '•$ ^ò5T...'2 r•UCà qç€ 0

VACATION & MOVING TIPS

REPLACING LIGHT BULBS

Both the freezer and fresh food compartments of your refrigerator include light bulbs that will need replacing from time to time. Some lights have covers that you will need to remove before replacing the bulbs. Always use bulbs that are designed for appliance lighting.

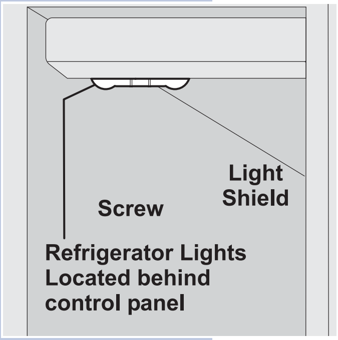

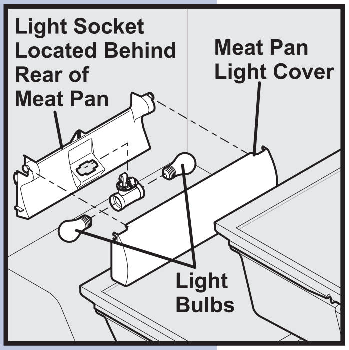

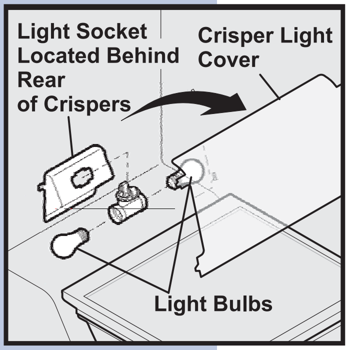

To replace light bulbs:

1. Unplug your refrigerator's power cord.
2. Wear gloves as protection against possible broken glass.
3. Remove light cover, if necessary.
4. Unscrew and replace old bulb with an appliance bulb of the same type and wattage (normally 40 watts).
5. Replace light cover, if necessary.
6. Plug in the refrigerator's power cord.

REFRIGERATOR WARRANTY *Your refrigerator is protected by this warranty*

	WARRANTY PERIOD	THROUGH OUR AUTHORIZED SERVICERS, WE WILL:	THE CONSUMER WILL BE RESPONSIBLE FOR:
FULL ONE-YEAR WARRANTY	One year from original purchase date.	Pay all costs for repairing or replacing any parts of this appliance which prove to be defective in materials or workmanship. Excludes original and replacement Ice & Water filter cartridges (if equipped). Original and replacement cartridges are warranted for 30 days (parts only).	Costs of service calls that are listed under NORMAL RESPONSIBILITIES OF THE CONSUMER.*
LIMITED 2nd– 5TH YEAR WARRANTY (Cabinet Liner and Sealed System)	Second through fifth years from original purchase date.	Repair or replace any parts in the cabinet liner or sealed refrigeration system (compressor, condenser, evaporator, dryer or tubing) which prove to be defective in materials or workmanship.	Costs for pickup and delivery of the appliance required because of service. Costs for labor, parts and transportation other than with respect to the cabinet liner or Sealed Refrigeration System.
LIMITED WARRANTY (Applicable to the State of Alaska)	Time periods listed above.	All of the provisions of the full warranties above and the exclusions listed below apply.	Costs of the technician's travel to the home and any costs for pick up and delivery of the appliance required because of service.

In the U.S.A., your appliance is warranted by Electrolux Home Products, Inc. We authorize no person to change or add to any of our obligations under this warranty. Our obligations for service and parts under this warranty must be performed by us or an authorized Electrolux Home Products, Inc. servicer. In Canada, your appliance is warranted by Electrolux Canada Corp.

***NORMAL RESPONSIBILITIES OF THE CUSTOMER**

This warranty applies only to products in ordinary household use, and the consumer is responsible for the items listed below:

1. Proper use of the appliance in accordance with instructions provided with the product.
2. Proper installation by an authorized servicer in accordance with instructions provided with the appliance and in accordance with all local plumbing, electrical and/or gas codes.
3. Proper connection to a grounded power supply of sufficient voltage, replacement of blown fuses, repair of loose connections or defects in house wiring.
4. Expenses for making the appliance accessible for servicing, such as removal of trim, cupboards, shelves, etc., which are not a part of the appliance when it was shipped from the factory.
5. Damages to finish after installation.
6. Replacement of light bulbs and/or fluorescent tubes (on models with these features).

EXCLUSIONS

This warranty does not cover the following:

1. CONSEQUENTIAL OR INCIDENTAL DAMAGES SUCH AS PROPERTY DAMAGE AND INCIDENTAL EXPENSES RESULTING FROM ANY BREACH OF THIS WRITTEN OR ANY IMPLIED WARRANTY.
   Note: Some states do not allow the exclusion or limitation of incidental or consequential damages, so this limitation or exclusion may not apply to you.
2. Service calls which do not involve malfunction or defects in workmanship or material, or for appliances not in ordinary household use. The consumer shall pay for such service calls.
3. Damages caused by services performed by servicers other than Electrolux Home Products, Inc., Electrolux Canada Corp., or its authorized servicers; use of parts other than genuine Electrolux Home Products parts; obtained from persons other than such servicers; or external causes such as abuse, misuse, inadequate power supply or acts of God.
4. Products with original serial numbers that have been removed or altered and cannot be readily determined.

IF YOU NEED SERVICE

Keep your bill of sale, delivery slip, or some other appropriate payment record. The date on the bill establishes the warranty period should service be required. If service is performed, it is in your best interest to obtain and keep all receipts. This written warranty gives you specific legal rights. You may also have other rights that vary from state to state. Service under this warranty must be obtained by contacting Electrolux Home Products, Inc. or Electrolux Canada Corp.

This warranty only applies in the 50 States of the U.S.A. and Puerto Rico, and Canada. Product features or specifications as described or illustrated are subject to change without notice. All warranties are made by Electrolux Home Products, Inc. In Canada, your appliance is warranted by Electrolux Canada Corp.

USA
800-944-9044
Electrolux Home Products, Inc.
P.O. Box 212378
Augusta, GA 30917

Canada
866-213-9397
Electrolux Canada Corp.
6150 McLaughlin Road
Mississauga, Ontario
L5R 4C2

Solutions To Common Problems

BEFORE YOU CALL...

If you experience a problem with your refrigerator or notice a product behavior or condition you do not understand, you can usually avoid a call to your service representative by referring to this section for an answer. Beginning with the following table, this information includes common problems, causes, and suggested solutions.

Running Your Refrigerator

Problem	Cause	Correction
Compressor does not run.	• Cooling system is turned Off.	• Turn cooling system On. See page 15 for location of cooling system On/Off button.
	• Refrigerator is in defrost cycle.	• This is normal for a fully automatic defrost refrigerator. The defrost cycle occurs periodically, lasting about 30 minutes.
	• Plug at wall outlet is disconnected.	• Ensure plug is tightly pushed into outlet.
	• House fuse blown or tripped circuit breaker.	• Check/replace fuse with a 15 amp time-delay fuse. Reset circuit breaker.
	• Power outage.	• Check house lights. Call local Electric Company.
Refrigerator runs too much or too long.	• Room or outside weather is hot.	• It's normal for the refrigerator to work longer under these conditions.
	• Refrigerator has recently been disconnected for a period of time.	• It takes 8-12 hours for the refrigerator to cool down completely.
	• Automatic ice maker is operating.	• Ice maker operation causes refrigerator to run slightly more.
	• Doors are opened too frequently or too long.	• Warm air entering the refrigerator causes it to run more. Open doors less often.
	• Refrigerator/freezer door may be slightly open.	• Ensure refrigerator is level. Keep food and containers from blocking door. See Problem section Opening/ Closing of Doors/ Drawers.
	• Freezer control is set too cold (control found in fresh food section).	• Set freezer control to warmer setting until refrigerator temperature is satisfactory. Allow 24 hours for temperature to stabilize.
	• Fresh food/freezer gasket is dirty, worn, cracked, or poorly fitted.	• Clean or change gasket. Leaks in door seal will cause refrigerator to run longer in order to maintain desired temperatures.
Compressor does not run.	• Electronic control system keeps the refrigerator at a constant temperature.	• This is normal. Refrigerator goes on and off to keep temperature constant.
Digital temperature displays are flashing.	• Electronic control system has detected a performance problem.	• Call your Electrolux service representative, who can interpret any messages or number codes flashing on the digital displays.

Solutions To Common Problems

Temperatures Are Too Cold

Problem	Cause	Correction
Freezer temperature too cold. Refrigerator temperature is satisfactory.	• Freezer control is set too cold.	• Set freezer control to a warmer setting. Allow 24 hours for temperature to stabilize.
Refrigerator temperature too cold. Freezer temperature is satisfactory.	• Refrigerator control is set too cold.	• Set refrigerator control to a warmer setting. Allow 24 hours for temperature to stabilize.
Food stored in drawers freezes.	• Refrigerator control is set too cold.	• See solution above.
Food stored in Meat Keeper freezes (some models).	• Meat Keeper temperature control is set too cold.	• Adjust Meat Keeper temperature control to a lower setting. Meat should be stored at a tempeature just below the freezing point for maximum fresh storage time. It is normal for ice crystals to form due to the moisture content of meat.

Temperatures Are Too Warm

Problem	Cause	Correction
Freezer/Refrigerator temperature is too warm.	• Doors are opened too frequently or too long. • Door is slightly open.	• Warm air enters the refrigerator whenever the door is opened. Open the door less often. • See Problem section Opening/Closing Of Doors/Drawers.
Freezer temperature is too warm. Refrigerator temperature is satisfactory.	• Freezer control is set too warm.	• Set freezer control to a colder setting. Allow 24 hours for temperature to stabilize.
Refrigerator temperature is too warm. Freezer temperature is satisfactory.	• Refrigerator control is set too warm.	• Set refrigerator control to a colder setting. Allow 24 hours for temperature to stabilize.
Temperature in the Meat Keeper is too warm (some models).	• Meat Keeper temperature control is set too warm.	• Adjust Meat Keeper temperature control to a colder setting.

Water/Moisture/Frost Inside Refrigerator

Problem	Cause	Correction
Moisture collects on inside of refrigerator walls.	• Weather is hot and humid. • Door is slightly open. • Door is opened too often or too long. • Open containers.	• The rate of frost buildup and internal sweating increases. • See Problem section Opening/Closing Of Doors/Drawers. • Open door less often. • Keep containers covered.
Water collects on bottom side of drawer cover.	• Vegetables contain and give off moisture.	• Moisture on the bottom side of the cover is not unusual. • Move humidity control (some models) to lower setting.
Water collects in bottom of drawer.	• Washed vegetables and fruit drain while in the drawer.	• Dry items before putting them in the drawer. Water collecting in bottom of drawer is normal.

Solutions To Common Problems

Water/Moisture/Frost Outside Refrigerator

Problem	Cause	Correction
Moisture collects on outside of refrigerator or between doors.	• Weather is humid. • Door is slightly open, causing cold air from inside refrigerator to meet warm air from outside.	• This is normal in humid weather. When humidity is lower, the moisture should disappear. • See Problem section Opening/Closing Of Doors/Drawers.

Automatic Ice Maker

Problem	Cause	Correction
Ice maker is not making any ice.	• Ice maker power switch is Off. • Water supply is not connected to refrigerator. • Household water line valve is not open. • Freezer is not cold enough. • Valve on cold water pipe is clogged or restricted by foreign material. If valve is of the self-piercing type, it may not have created a sufficiently sized hole in tube for water to pass through). • Check to see if the water dispenser is dispensing water. • Water filter is not completely seated.	• Turn on power switch. • Connect water supply (see *Installation Instructions)*. • Turn on household water line valve. • See Problem section Temperatures Are Too Warm. • Turn off household water line valve. Remove valve. Ensure that valve is not a self-piercing valve. Clean valve. Replace valve if necessary. • If not, the ice & water filter cartridge is clogged or restricted, and must be replaced. • Push firmly until the water filter snaps into place.
Ice maker is not making enough ice.	• Ice maker is producing less ice than you expect. • Freezer is not cold enough. • Household water line valve is not completely open. • Check to see if water dispenser is dispensing slower than normal.	• Ice maker should produce approximately 4-5 pounds of ice every 24 hours. *Express Ice* should produce up to 6 pounds of ice every 24 hours. • See Problem section Temperatures Are Too Warm. • Turn on household water line valve. • If it is, replace the ice & water filter cartridge.
Ice maker will not stop making ice.	• Ice maker wire signal arm is being held down by some item in the freezer.	• Move item and release wire signal arm. Remove any ice cubes frozen together over wire signal arm.
Ice maker is not separating the ice cubes.	• Ice cubes are not being used frequently enough. • Ice cubes are hollow or smaller than normal.	• Remove and shake ice bin to separate cubes. • The ice & water filter cartridge may be clogged. Replace filter cartridge.
Ice has bad odor and taste.	• Ice has picked up odor or flavor from strong food stored in refrigerator or freezer. • Water running to ice maker has poor taste or odor. • Ice not used frequently enough.	• Cover foods tightly. Discard stale ice. Ice maker will produce fresh supply. • Add filter to water supply line. Consult a water purifying company. • Discard stale ice.

Solutions To Common Problems

Ice Dispenser

Problem	Cause	Correction
Dispenser will not dispense ice.	• Water supply is not connected. • Ice storage container is empty. • Freezer temperature is set too warm. • Household water line valve is not open. • Freezer door is not closed. • Ice dispensing arm has been held in for more than 4-5 minutes.	• Connect water supply (see page 9). • When the first supply of ice is dropped into the container, the dispenser should operate. • Turn freezer control to a higher setting so that ice cubes will be made. When first supply of ice is made, dispenser should operate. • Open household water line valve. Allow sufficient time for the ice to be made. When ice is made, the dispenser should operate. • Ensure freezer door is closed. • Motor is overloaded. Motor overload protector will reset in approximately 3 minutes. Ice can then be dispensed.
Ice dispenser is jammed.	• Ice has melted and frozen around auger due to infrequent use, temperature fluctuations, and/or power outages. • Ice cubes are jammed between ice maker and back of ice container. • Ice cubes are frozen together. • Ice cubes are hollow or smaller than normal.	• Remove ice container, thaw, and empty the contents. Clean container, wipe dry, and replace in proper position. When new ice is made, dispenser should operate. • Remove ice cubes that are jamming the dispenser. • Use the dispenser often so that cubes do not freeze together. • The ice & water filter cartridge could be clogged. Replace the filter cartridge. Dispensing system operates best at 20-100 psi water pressure. Well water pressures should fall within this range.

Water Dispenser

Problem	Cause	Correction
Dispenser will not dispense water.	• Water supply is not connected. • Household water line valve is not open. • Freezer door is not closed. • Ice & water filter cartridge is clogged. • Front filter not fully installed, if equipped	• Connect water supply (see page 9). • Open household water line valve. See Problem section Ice Maker Is Not Making Ice. • Ensure that freezer door is closed. • Replace filter cartridge. • Push filter in until you hear a "click". Filter should be flush with cabinet.
Water has an odd taste and/or odor.	• Water has been in the tank for a period of time. • Unit not properly connected to cold water line. • Tubing used in the household water supply and installation may affect water taste and odor. • Water has a high mineral content.	• Draw and discard 10-12 glasses of water to freshen the supply and completely rinse out the tank. • Connect unit to cold water line that supplies water to the kitchen faucet. • For best results, use copper tubing for water connections. • Contact water treatment plant for help.
Water pressure is extremely low.	• Cut-off and cut-on pressures are too low (well systems only). • Reverse osmosis system is in regenerative phase.	• Have someone turn up the cut-off and cut-on pressure on the water pump system (well systems only). • It is normal for a reverse osmosis system to be below 20 psi during the regenerative phase.

Solutions To Common Problems

Odors In Refrigerator

Problem	Cause	Correction
Interior is dirty.	• Interior needs to be cleaned. • Food with strong odors is in refrigerator.	• See *Care & Cleaning Tips*. • Cover food tightly.

Opening/Closing Of Doors/Drawers

Problem	Cause	Correction
Door(s) will not close.	• Door was closed too hard, causing other door to open slightly. • Refrigerator is not level. It rocks on the floor when moved slightly. • Refrigerator is touching a wall or cabinet.	• Close both doors gently. • Ensure floor is level and solid, and can adequately support the refrigerator. Contact a carpenter to correct a sagging or sloping floor. • Ensure floor is level and solid, and can adequately support the refrigerator. Contact a carpenter to correct a sagging or sloping floor.
Drawers are difficult to move.	• Food is touching shelf on top of drawer. • Track that drawers slide on is dirty.	• Keep less food in drawer. • Clean drawer, runners, and tracks. See *Care & Cleaning Tips*.

Light Bulb Is Not On

Problem	Cause	Correction
Light bulb is not on.	• Light bulb is burned out. • Freezer light switch is stuck. • No electric current is reaching refrigerator. • Control system has disabled lights because magnet mounted behind dairy compartment (in fresh food door) has been removed. • Control system has disabled lights because one or both doors were left open too long.	• See *Replacing Light Bulbs* in Care and Cleaning section. • Release light switch located inside freezer compartment. • See Problem section, Running Your Refrigerator. • Reinstall magnet. • Close and reopen door(s) to enable lights.